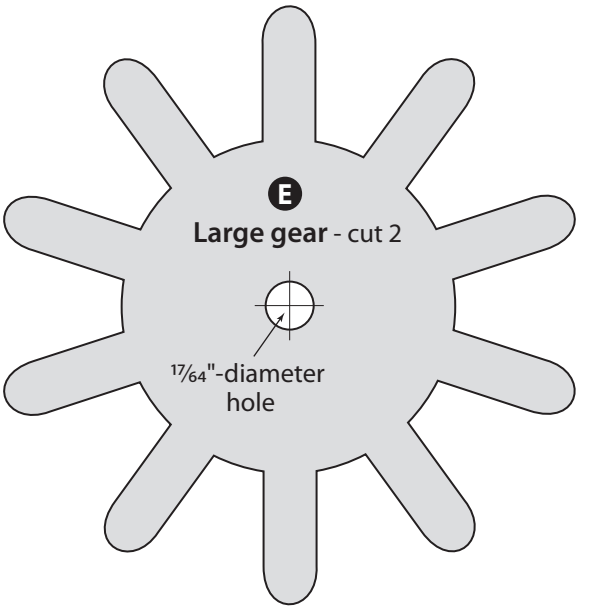
E
Large gear - cut 2
17/64"-diameter hole

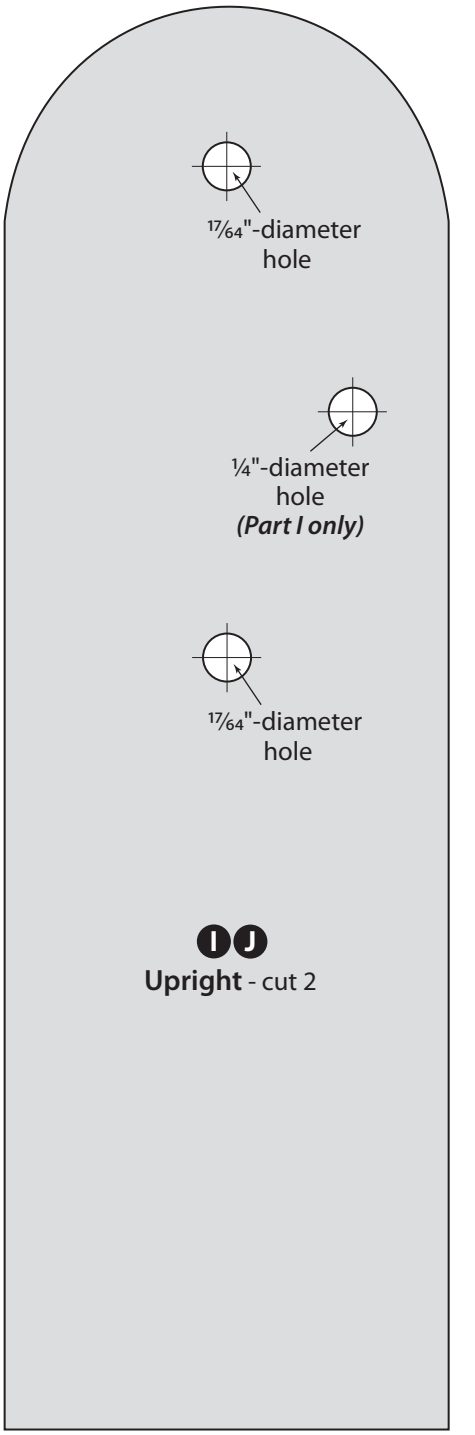
17/64"-diameter hole
¼"-diameter hole
(Part I only)
17/64"-diameter hole
I J
Upright - cut 2

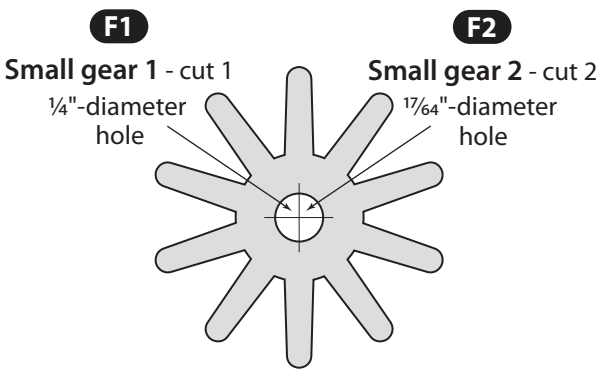
F1
Small gear 1 - cut 1
¼"-diameter hole
F2
Small gear 2 - cut 2
17/64"-diameter hole

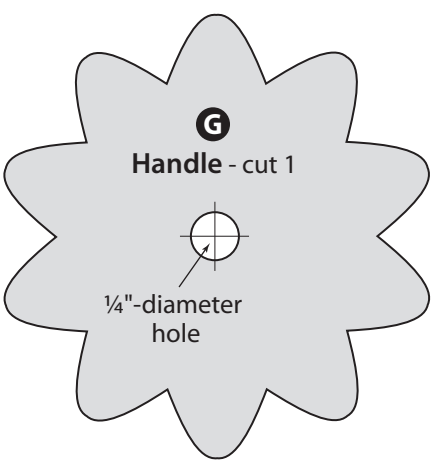
G
Handle - cut 1
¼"-diameter hole

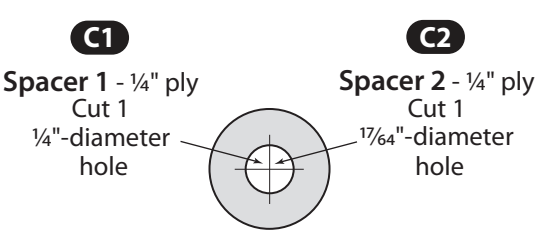
C1
Spacer 1 - ¼" ply
Cut 1
¼"-diameter hole
C2
Spacer 2 - ¼" ply
Cut 1
17/64"-diameter hole

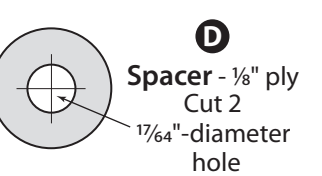
D
Spacer - ⅛" ply
Cut 2
17/64"-diameter hole